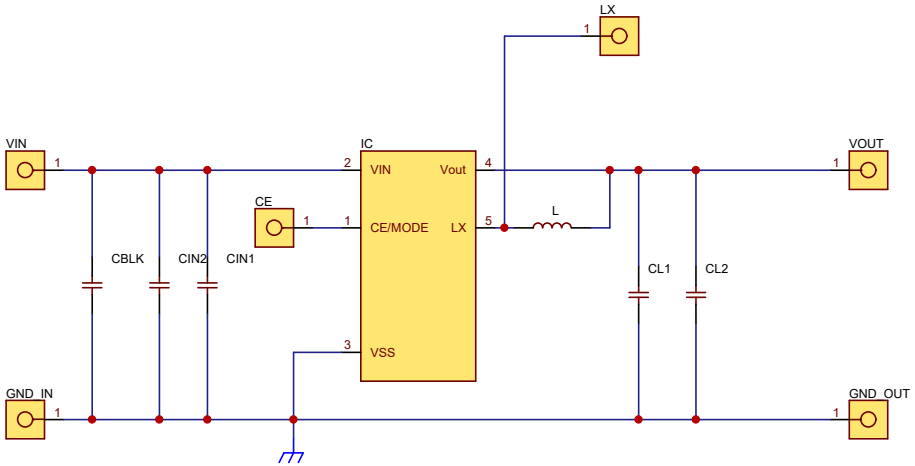

Series Name	XC9235/XC9236/XC9237
Category Name	Step-Down DC/DC Converters
Packages	WLP-5-03
TOREX SEMICONDUCTOR	A4
	1 / 1